rev:	revision text:	rev.date:	rev.by:	aprv. date:	aprv. by:
02	general simplification	2023-12-14	KaGund	2023-12-19	McNaeb

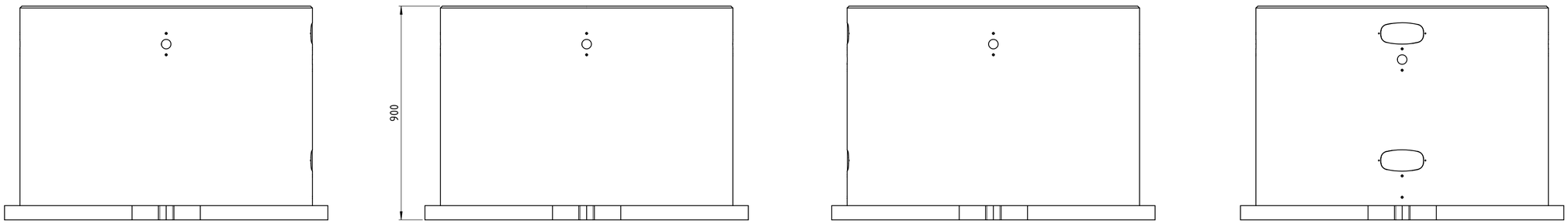

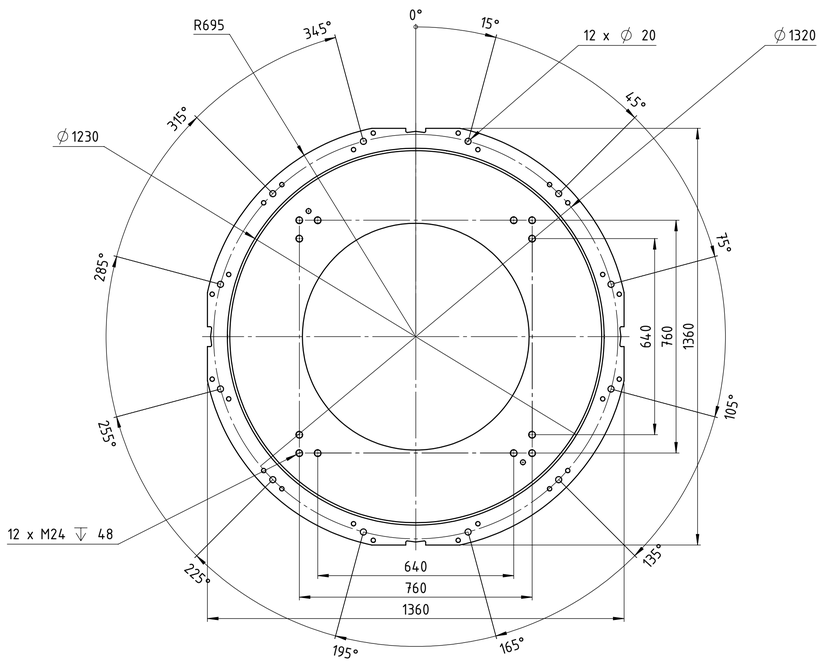

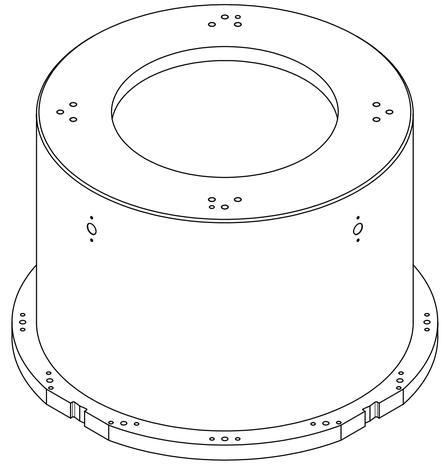

CONFIDENTIAL! The reproduction, distribution and utilization of this document as well as the communication of its contents to others without express authorization is prohibited. Offenders will be held liable for the payment of damages. All rights reserved in the event of the grant of a patent, utility model or design.

where nothing else is indicated: tolerances: DIN ISO 2768-mH welding: DIN EN ISO 13920-A edges: DIN EN ISO 13715 -0,3 -0,5 +0,3	status: Released		YASKAWA www.yaskawa.eu.com	dimension:	weight: 618,191 kg
	SAP EMEA no:	SAP AH no: 230797		created: 2023-07-19	MicNaeb
				drawn: 2023-07-19	MicNaeb
	title / description: robot stand T-900			approved: 2023-07-19	RaiSeid
				drawing-no.: 0001060292-100	revision: 02
					sheet: A1 1:10 4/5