rev:	revision text:	rev.date:	rev.by:	aprv. date:	aprv. by:
02	improved cutline	2023-07-18	MicNaeb	2023-07-18	RaiSeid
03	general simplification	2023-12-20	KaiGünd	2023-12-20	MicNaeb
04	Ausschnitt oben geändert	2025-04-24	SimHube	2025-04-24	MicNaeb
05	hole pattern updated	2025-04-25	SimHube	2025-04-25	MicNaeb
06	Center mark and drillings changed	2025-07-11	SimHube	2025-07-14	MicNaeb

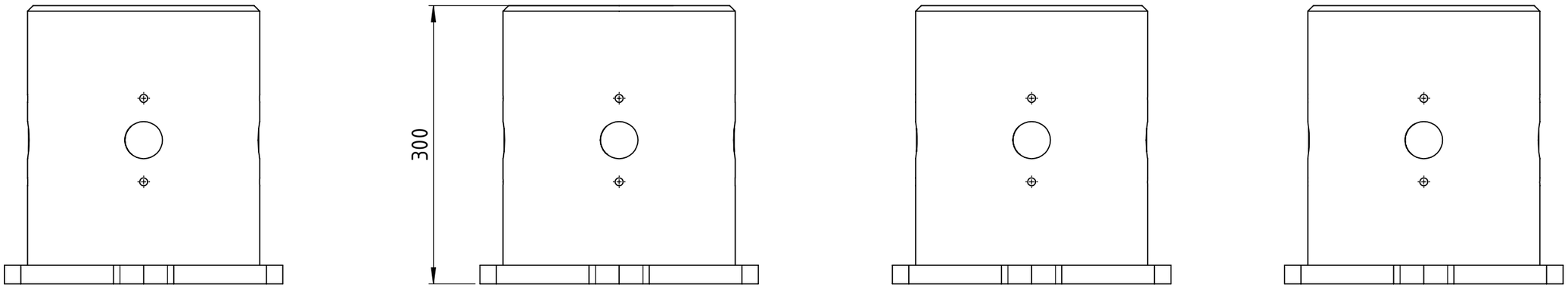

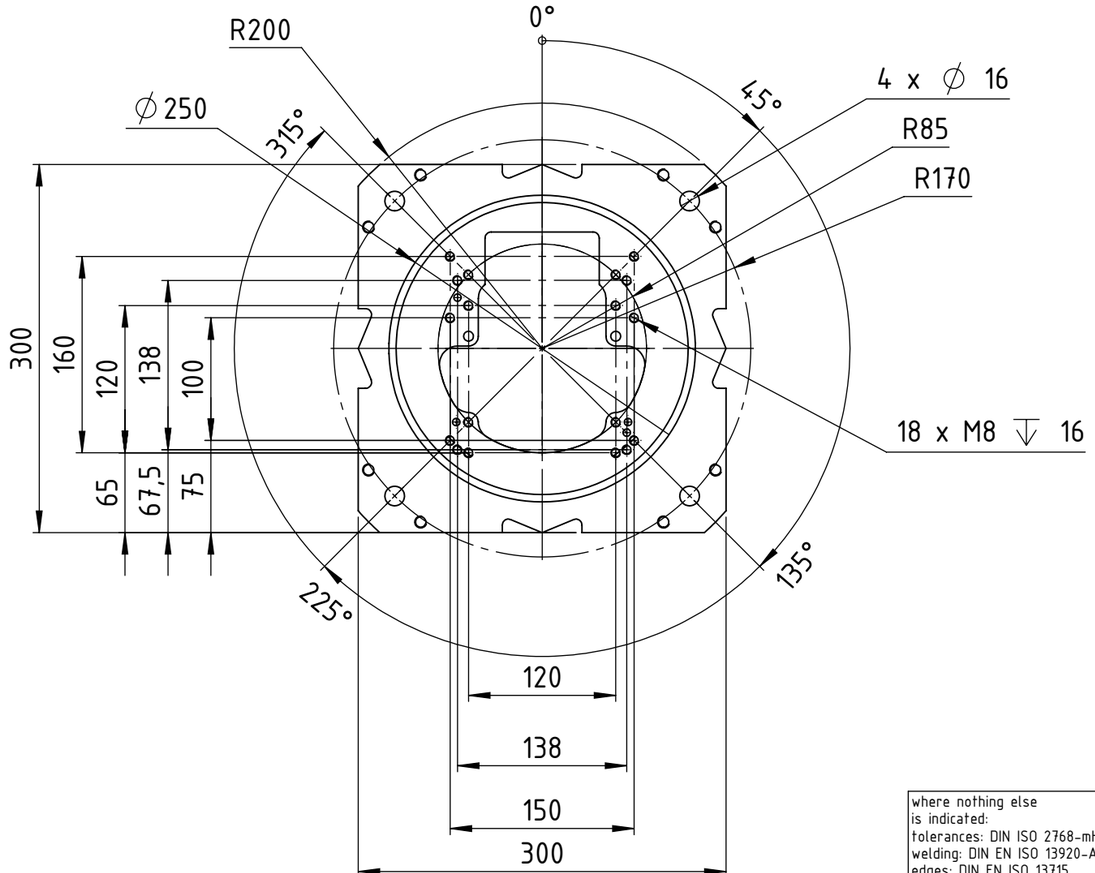

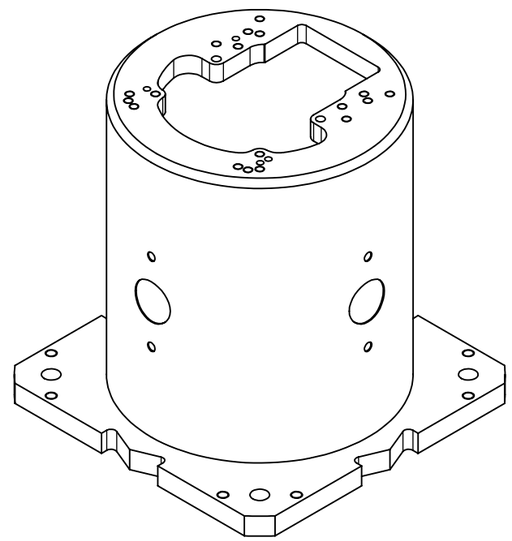

where nothing else is indicated:
tolerances: DIN ISO 2768-mH
welding: DIN EN ISO 13920-A
edges: DIN EN ISO 13715
-0,3
-0,5
+0,3

status: Released
SAP EMEA nr:
SAP AH nr: 229192
title / description: robot stand A-300

YASKAWA
www.yaskawa.eu.com

dimension: 300x300x300 mm		weight: 15,998 kg	
created:	2023-04-27	MicNaeb	
drawn:	2023-04-27	MicNaeb	sheet:
approved:	2023-04-27	KaiPeik	A3
drawing-nr.: 0001053433-100		revision: 06	1:5 4/5

CONFIDENTIAL! The reproduction, distribution and utilization of this document as well as the communication of its contents to others without express authorization is prohibited. Offenders will be held liable for the payment of damages. All rights reserved in the event of the grant of a patent, utility model or design